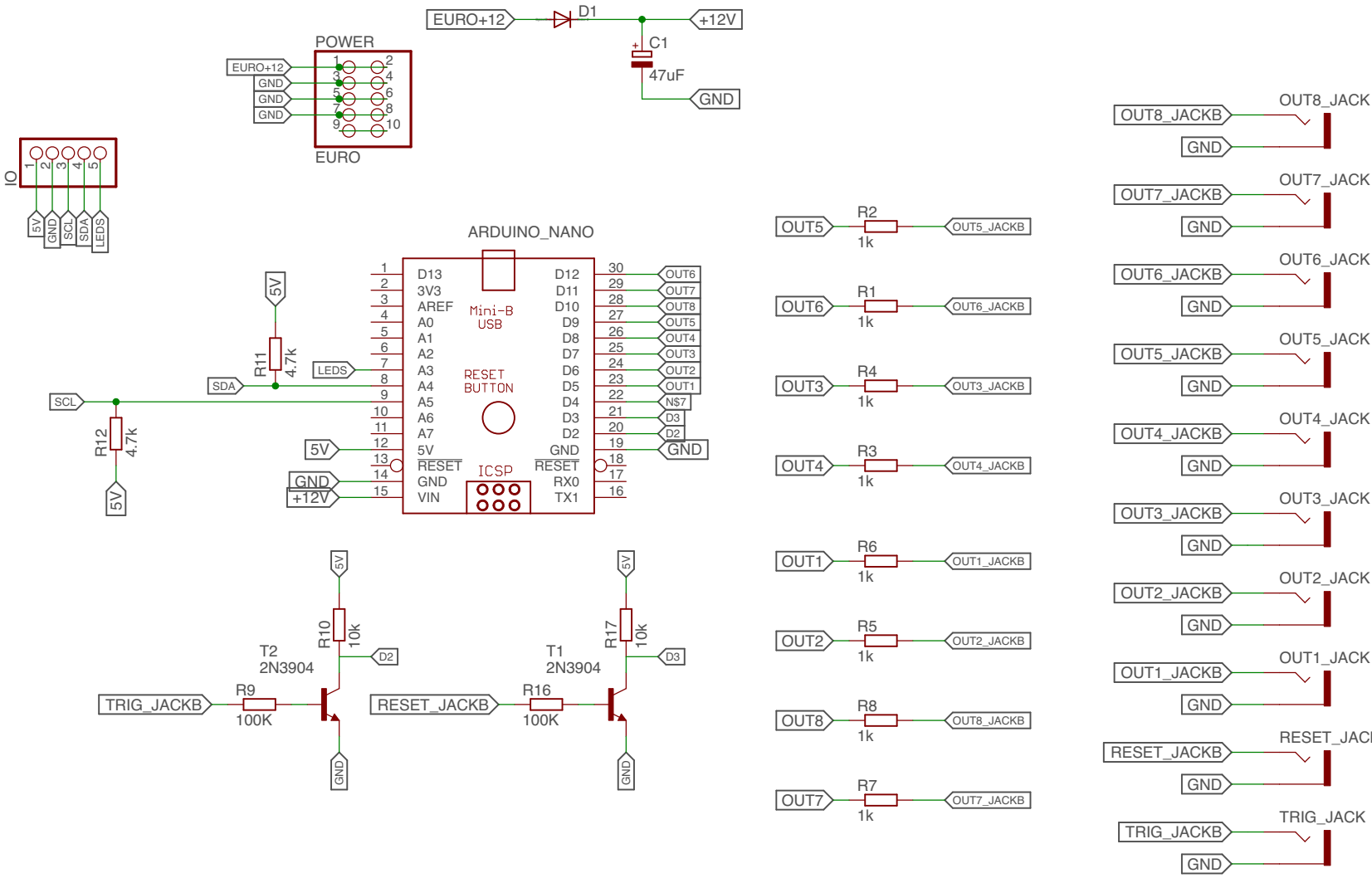
EURO+12
D1
+12V
C1
47uF
GND
POWER
EURO+12
GND
GND
GND
EURO
IO
5V
GND
SCL
SDA
LEDS
ARDUINO_NANO
Mini-B USB
RESET BUTTON
ICSP
D13
3V3
AREF
A0
A1
A2
A3
A4
A5
A6
A7
5V
RESET
GND
VIN
D12
D11
D10
D9
D8
D7
D6
D5
D4
D3
D2
GND
RESET
RX0
TX1
OUT6
OUT7
OUT8
OUT5
OUT4
OUT3
OUT2
OUT1
N$7
D3
D2
GND
R11
4.7k
R12
4.7k
T2
2N3904
R10
10k
R9
100K
TRIG_JACKB
T1
2N3904
R17
10k
R16
100K
RESET_JACKB
OUT5
R2
1k
OUT5_JACKB
OUT6
R1
1k
OUT6_JACKB
OUT3
R4
1k
OUT3_JACKB
OUT4
R3
1k
OUT4_JACKB
OUT1
R6
1k
OUT1_JACKB
OUT2
R5
1k
OUT2_JACKB
OUT8
R8
1k
OUT8_JACKB
OUT7
R7
1k
OUT7_JACKB
OUT8_JACK
OUT7_JACK
OUT6_JACK
OUT5_JACK
OUT4_JACK
OUT3_JACK
OUT2_JACK
OUT1_JACK
RESET_JACK
TRIG_JACK