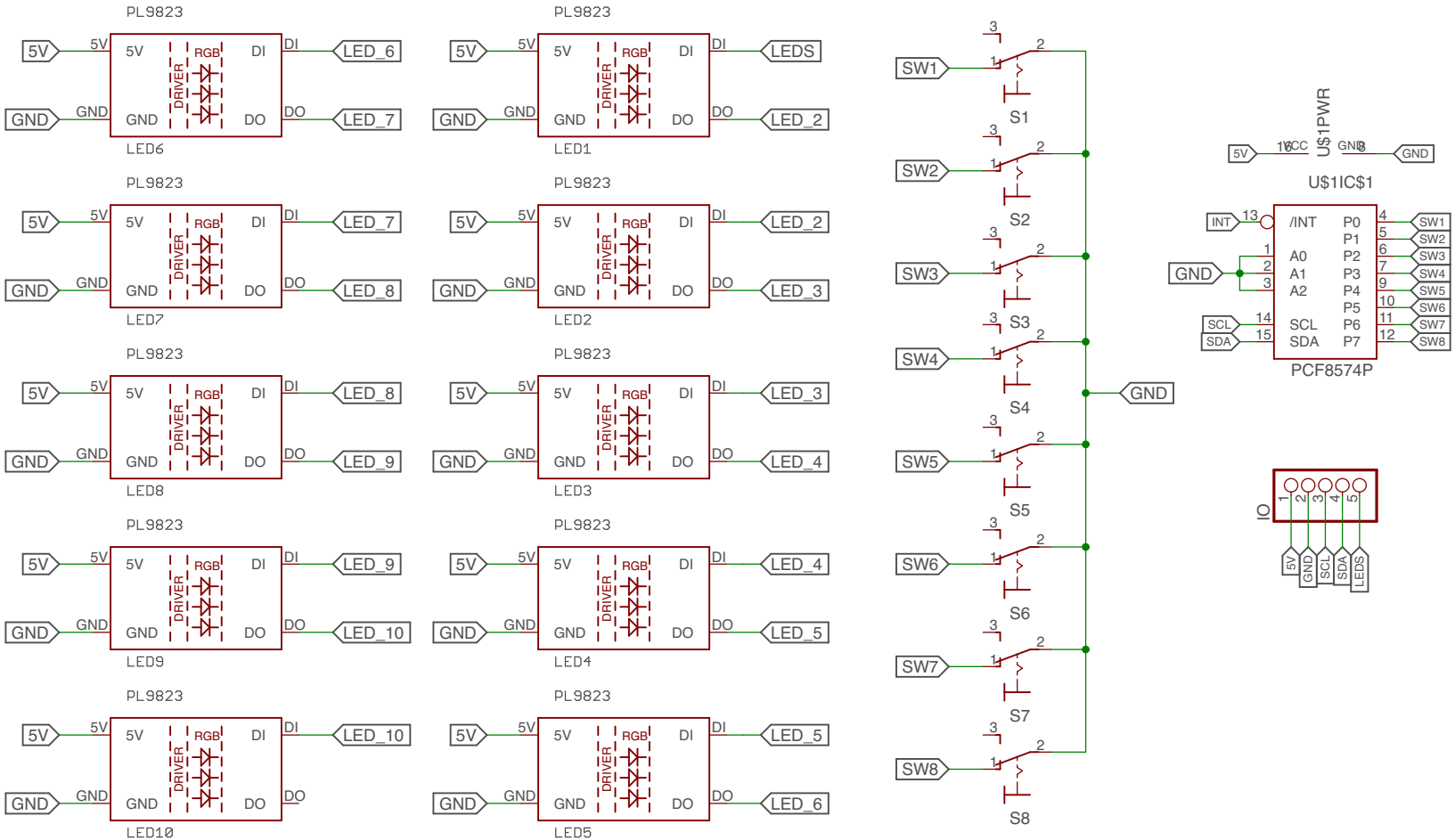
PL9823
5V
GND
DI
DO
RGB
DRIVER
LED_6
LED_7
LED6
LEDS
LED_2
LED1
LED_8
LED7
LED_3
LED2
LED_9
LED8
LED_4
LED3
LED_10
LED9
LED_5
LED4
LED10
SW1
SW2
SW3
SW4
SW5
SW6
SW7
SW8
S1
S2
S3
S4
S5
S6
S7
S8
U$1PWR
U$1IC$1
VCC
INT
/INT
A0
A1
A2
SCL
SDA
P0
P1
P2
P3
P4
P5
P6
P7
PCF8574P
IO