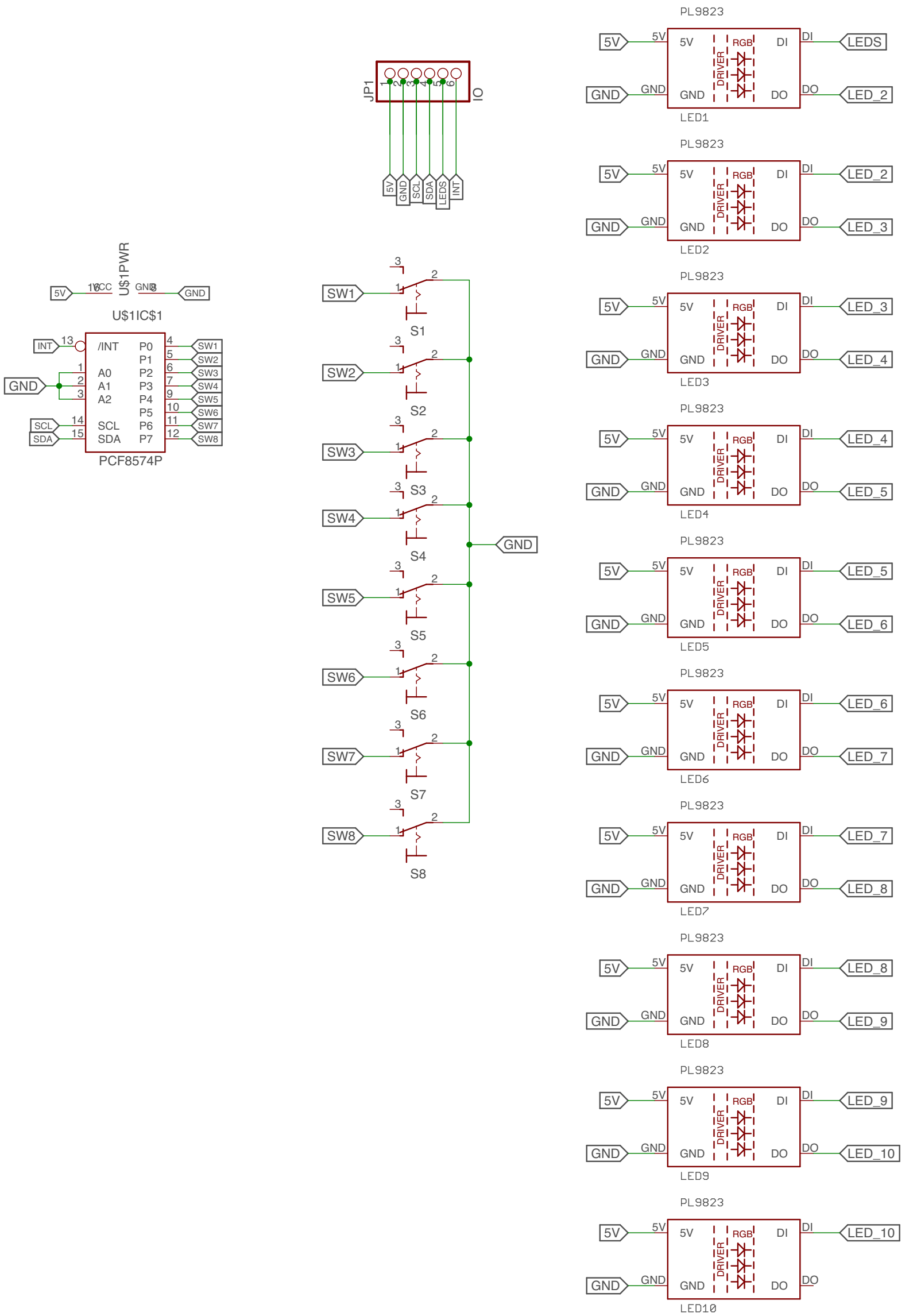
JP1
IO
5V
GND
SCL
SDA
LEDS
INT
U$1PWR
U$1IC$1
PCF8574P
/INT
A0
A1
A2
SCL
SDA
P0
P1
P2
P3
P4
P5
P6
P7
SW1
SW2
SW3
SW4
SW5
SW6
SW7
SW8
S1
S2
S3
S4
S5
S6
S7
S8
PL9823
DRIVER
RGB
DI
DO
LED1
LED2
LED3
LED4
LED5
LED6
LED7
LED8
LED9
LED10
LEDS
LED_2
LED_3
LED_4
LED_5
LED_6
LED_7
LED_8
LED_9
LED_10