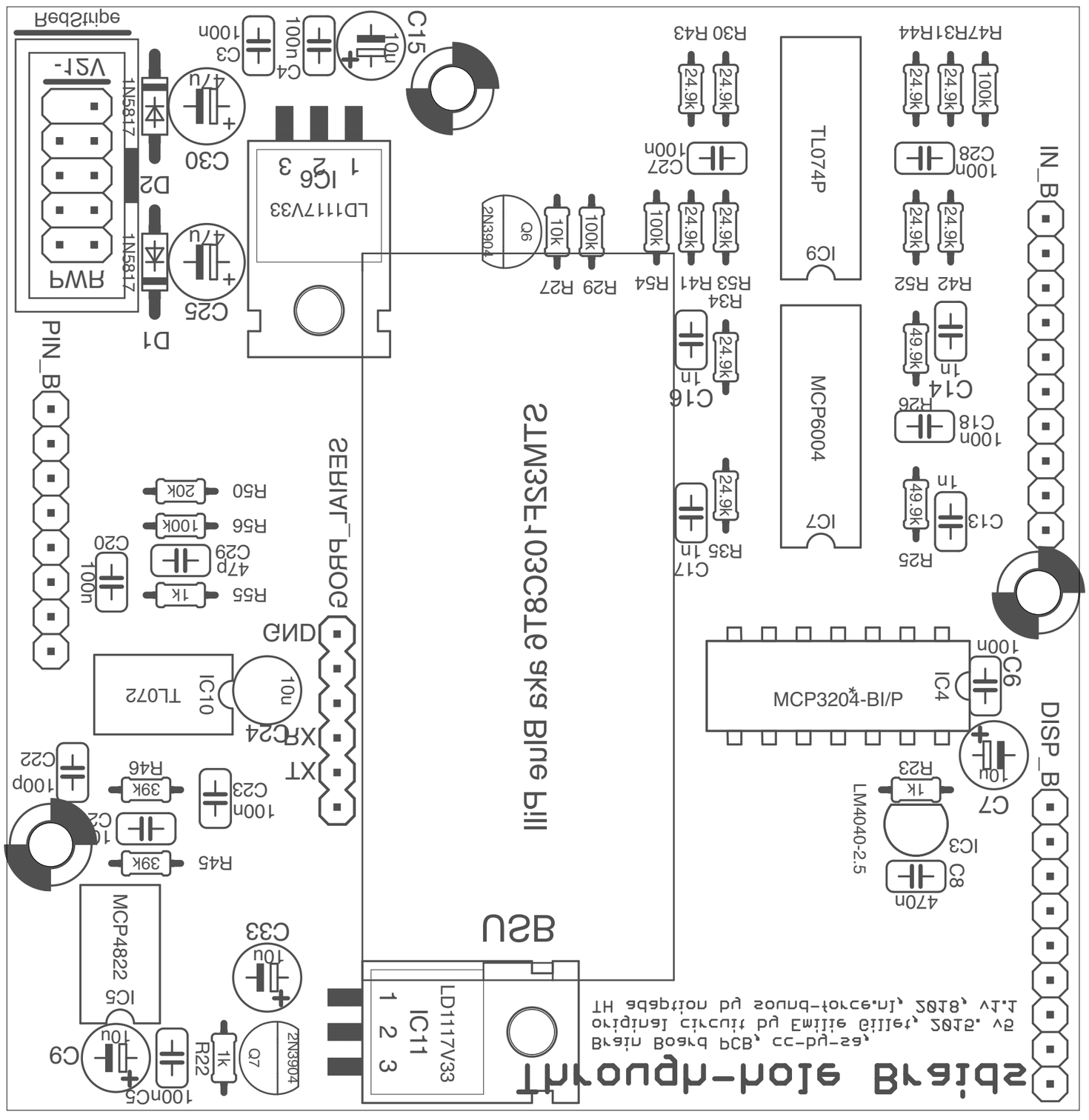
Through-hole Braids
Brain Board PCB, cc-by-sa,
original circuit by Emilie Gillet, 2015. v5
TH adaption by sound-force.nl, 2018, v1.1
RSU
LD1117V33
IC11
1 2 3
MCP4822
IC5
C9
10u
100nC5
R22
1k
Q7
2N3904
C33
10u
R45
39k
C22
100p
R46
39k
C23
100n
C24
10u
TL072
IC10
GND
XR
XT
R55
1k
47p
C29
100n
C20
R56
100k
R50
20k
PIN_B
SERIAL_PROG
STM32F103C8T6 aka Blue Pill
Q6
2N3904
R27
10k
R29
100k
R54
100k
R53
R41
R34
24.9k
C27
100n
R30
R43
24.9k
TL074P
IC9
MCP6004
IC7
R35
1n
C17
24.9k
R25
49.9k
C13
1n
R26
100n
C18
C14
1n
R42
R52
24.9k
C28
100n
R47
R31
R44
100k
IN_B
MCP3204-BI/P
IC4
C6
100n
C7
10u
R23
1k
LM4040-2.5
IC3
C8
470n
DISP_B
RW9
VCT-
1N5817
D2
D1
C25
47u
C30
47u
C3
100n
C4
100n
C15
10u
LD1117V33
IC6
1 2 3
RedStripe