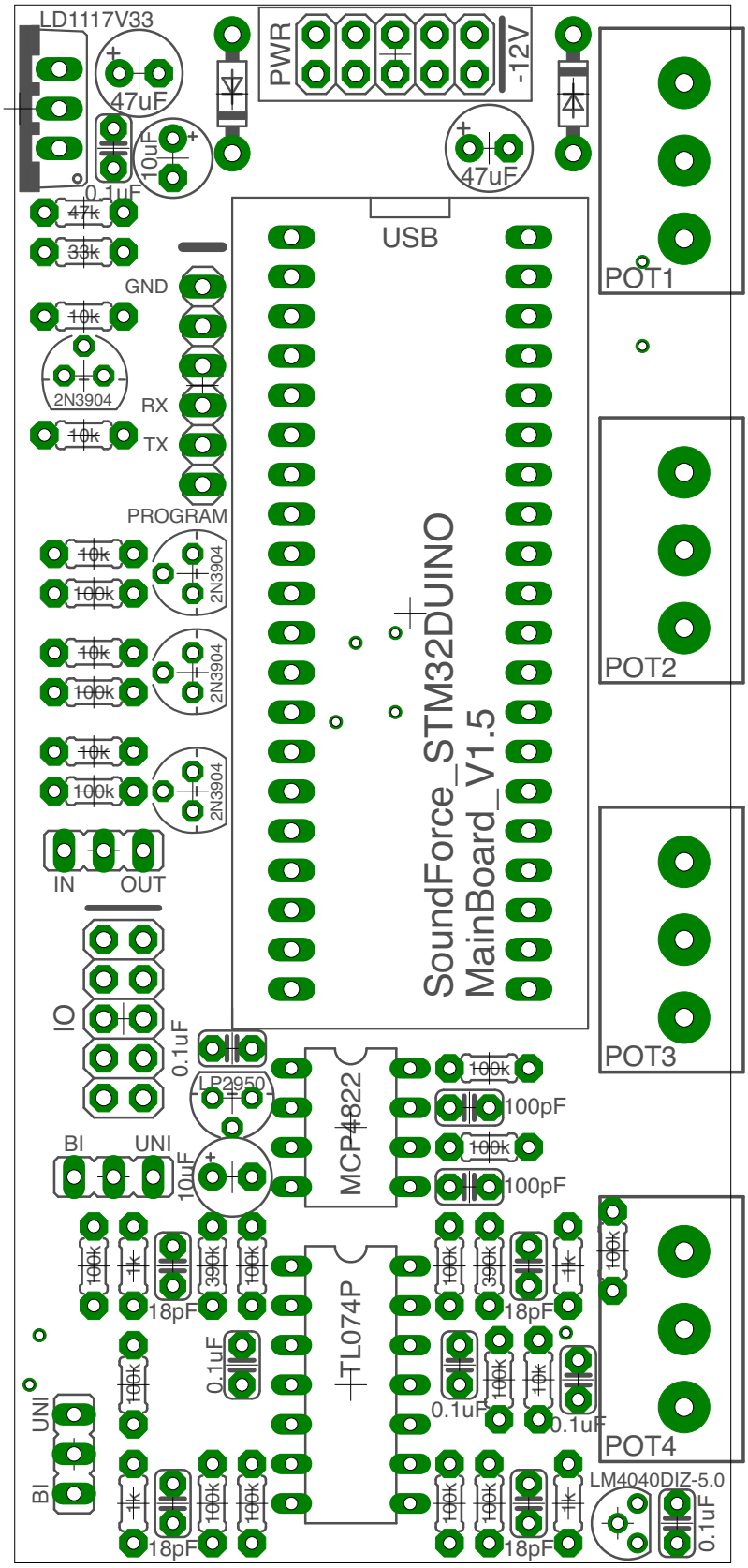
LD1117V33
47uF
10uF
0.1uF
PWR
-12V
47uF
USB
POT1
POT2
POT3
POT4
47k
33k
GND
10k
2N3904
RX
TX
PROGRAM
10k
100k
2N3904
IN
OUT
IO
0.1uF
LP2950
BI
UNI
10uF
MCP4822
100k
100pF
100k
100pF
100k
1k
390k
100k
18pF
TL074P
0.1uF
UNI
BI
LM4040DIZ-5.0
0.1uF
SoundForce_STM32DUINO
MainBoard_V1.5