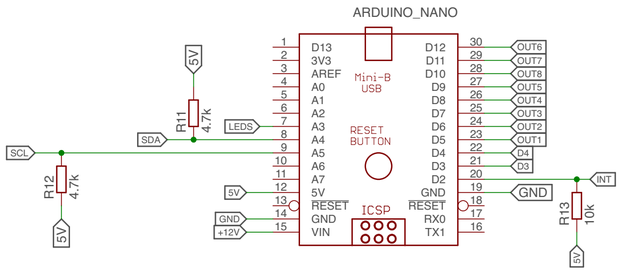
ARDUINO_NANO
Mini-B USB
RESET BUTTON
ICSP
D13
3V3
AREF
A0
A1
A2
A3
A4
A5
A6
A7
5V
RESET
GND
VIN
D12
D11
D10
D9
D8
D7
D6
D5
D4
D3
D2
GND
RESET
RX0
TX1
OUT6
OUT7
OUT8
OUT5
OUT4
OUT3
OUT2
OUT1
D4
D3
INT
GND
LEDS
SDA
SCL
5V
GND
+12V
R11 4.7k
R12 4.7k
R13 10k

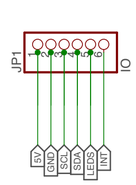
JP1
IO
5V
GND
SCL
SDA
LEDS
INT

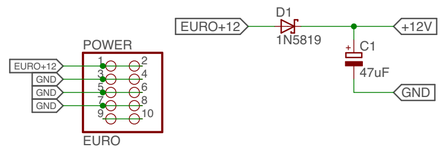
POWER
EURO
EURO+12
GND
GND
GND
EURO+12
D1
1N5819
+12V
C1
47uF
GND

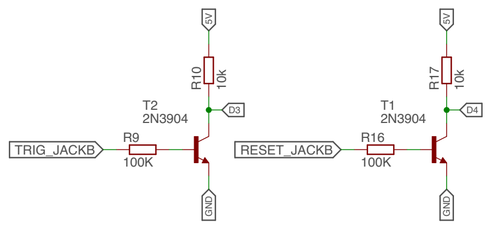
TRIG_JACKB
R9
100K
T2
2N3904
R10
10k
5V
D3
GND
RESET_JACKB
R16
100K
T1
2N3904
R17
10k
5V
D4
GND

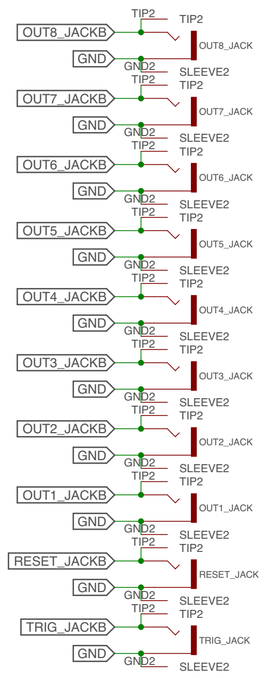
OUT8_JACKB
GND
OUT7_JACKB
GND
OUT6_JACKB
GND
OUT5_JACKB
GND
OUT4_JACKB
GND
OUT3_JACKB
GND
OUT2_JACKB
GND
OUT1_JACKB
GND
RESET_JACKB
GND
TRIG_JACKB
GND
TIP2
GND2
SLEEVE2
OUT8_JACK
OUT7_JACK
OUT6_JACK
OUT5_JACK
OUT4_JACK
OUT3_JACK
OUT2_JACK
OUT1_JACK
RESET_JACK
TRIG_JACK

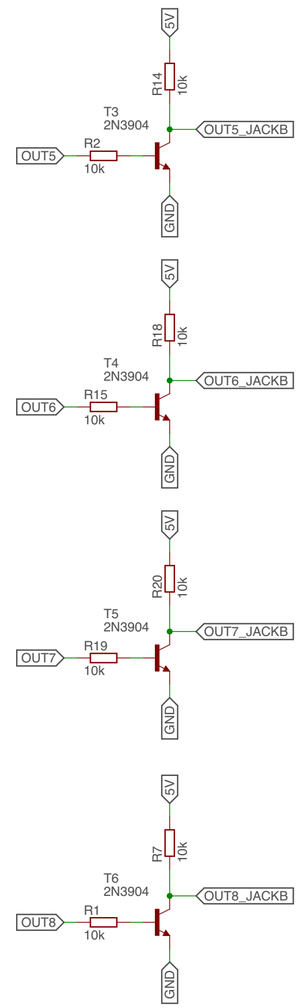
OUT5
R2
10k
T3
2N3904
R14
10k
5V
OUT5_JACKB
GND
OUT6
R15
10k
T4
2N3904
R18
10k
5V
OUT6_JACKB
GND
OUT7
R19
10k
T5
2N3904
R20
10k
5V
OUT7_JACKB
GND
OUT8
R1
10k
T6
2N3904
R7
10k
5V
OUT8_JACKB
GND

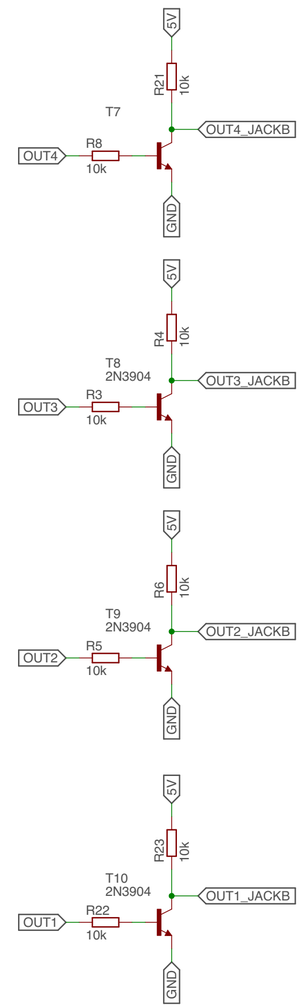
OUT4
R8
10k
T7
R21
10k
5V
OUT4_JACKB
GND
OUT3
R3
10k
T8
2N3904
R4
10k
5V
OUT3_JACKB
GND
OUT2
R5
10k
T9
2N3904
R6
10k
5V
OUT2_JACKB
GND
OUT1
R22
10k
T10
2N3904
R23
10k
5V
OUT1_JACKB
GND