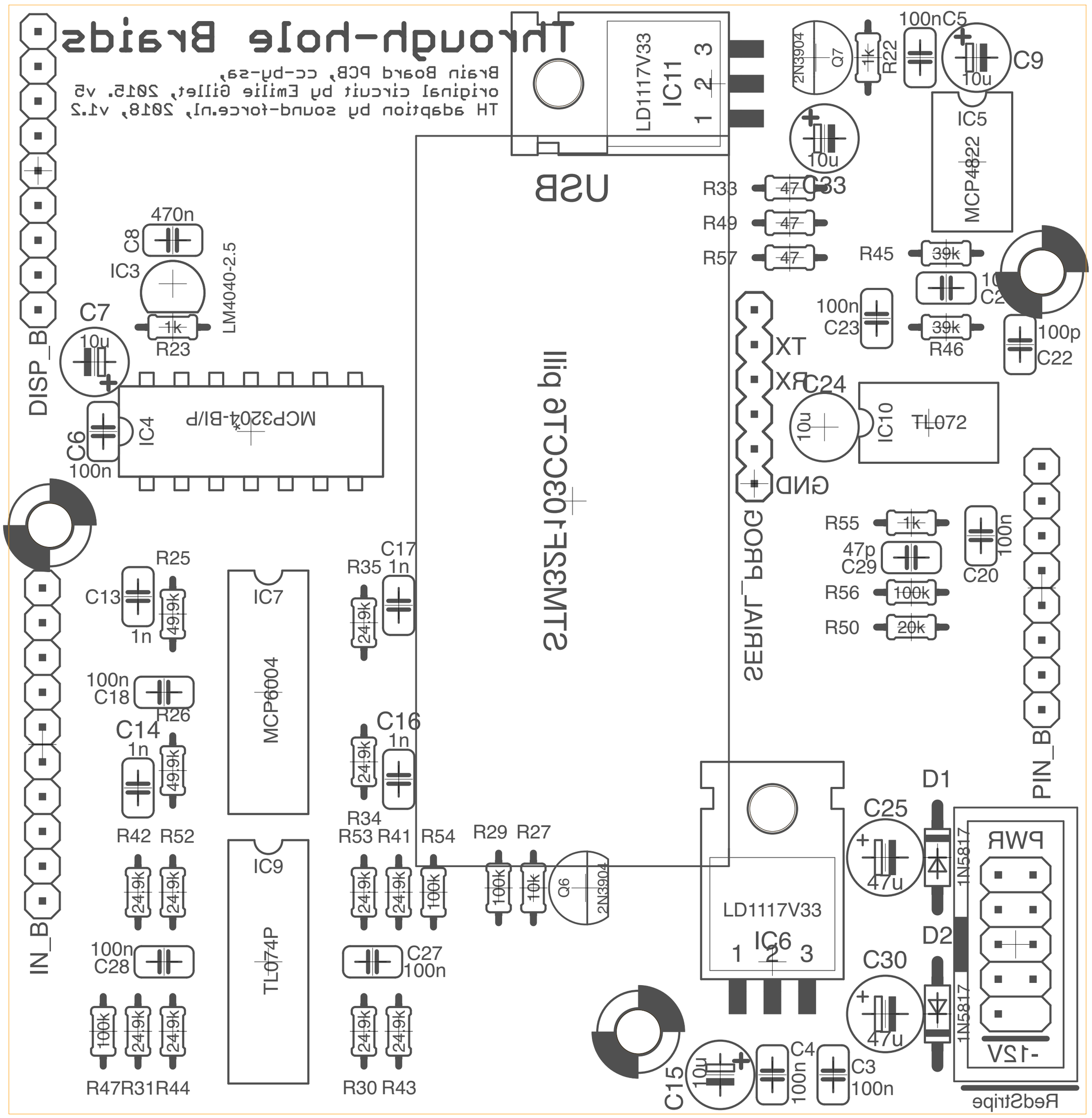
Through-hole Braids
Brain Board PCB, cc-by-sa,
original circuit by Emilie Gillet, 2015. v5
TH adaption by sound-force.nl, 2018, v1.2
DISP_B
IN_B
PIN_B
USB
STM32F103C8T6 Pill
SERIAL_PROG
RedStripe
PWR
-12V
LD1117V33
IC11
IC6
IC5
MCP4822
IC4
MCP3204-BI/P
IC3
LM4040-2.5
IC7
MCP6004
IC9
TL074P
IC10
TL072
Q7
2N3904
Q6
2N3904
D1
D2
1N5817
C9
C33
C22
C24
C25
C30
C3
C4
C15
C20
C29
C27
C28
C26
C23
C18
C17
C16
C14
C13
C8
C7
C6
C2
R22
R23
R25
R26
R33
R49
R57
R45
R46
R55
R56
R50
R35
R34
R53
R41
R54
R29
R27
R42
R52
R47
R31
R44
R30
R43
100nC5
470n
10u
1k
39k
100n
100p
47p
20k
100k
24.9k
49.9k
47
1n